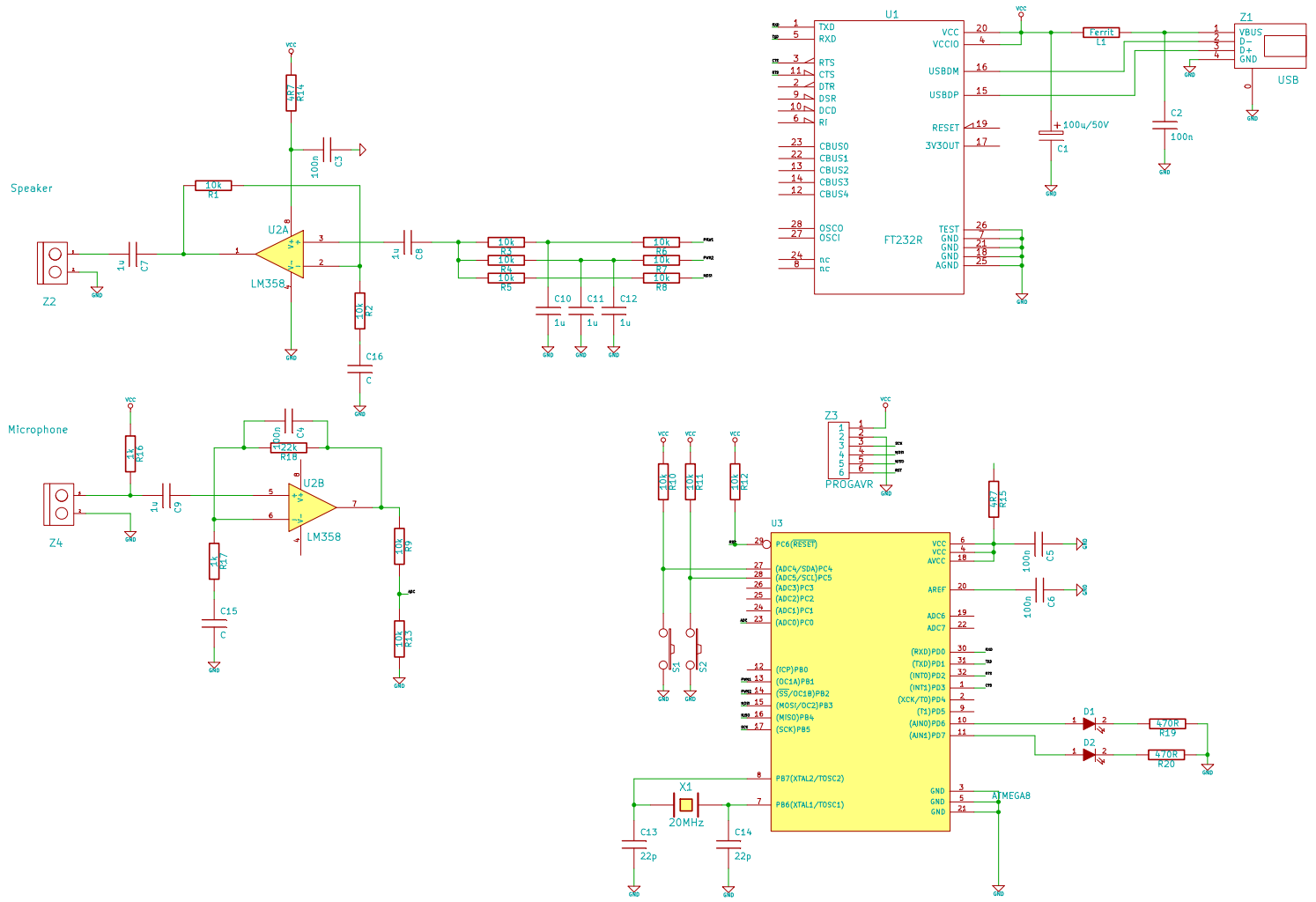

File: projekt8.sch		
Sheet: /		
Title:		
Size: A3	Date: 7 jan 2013	**Rev:**
KiCad E.D.A. eeschema (2011-07-08 BZR 3044)-stable		Id: 1/1